Project : MT6765 LPDDR3
REF_SCH TOP LEVEL

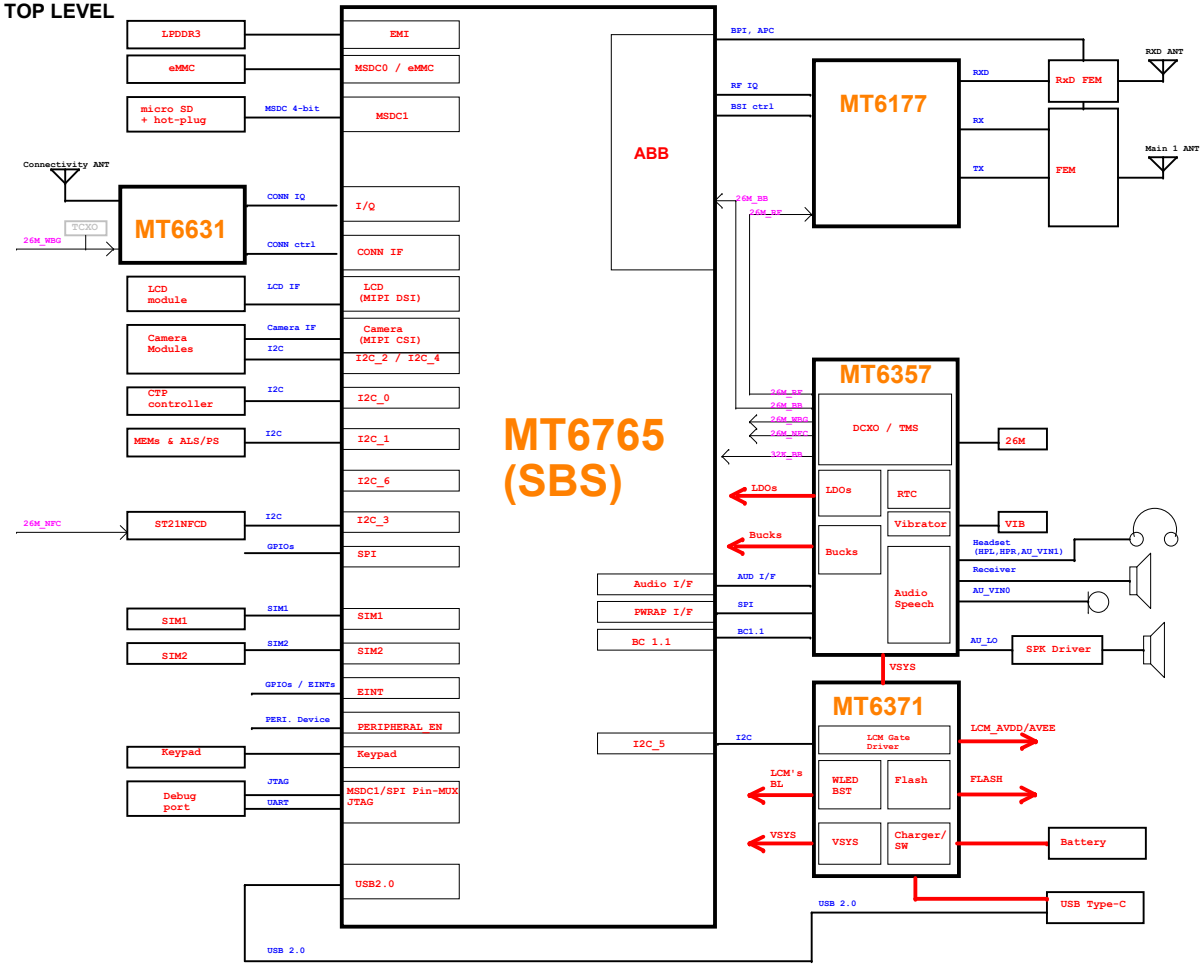

华勤通讯 Huaqin Telecom Technology Com.,Ltd		
Title	01_Block_Diagram	
Size D	Project F9_MB_V1	Rev V1
Date: Friday, October 19, 2018	Sheet 1 of 99	

I2C	Sub SYS	Function	Part Number	I2C Spec.		i2C Slave Address / Write / Read (7-bit mode)	
I2C-0	AP	Cap Touch controller	GT1151	400 Kbps		0x5D	Write:0xBA / Read:0xBB
I2C-1 (I3C)	AP	Magnetic Sensor	AK09918C	400 Kbps		0x0C	Write:0x18 / Read:0x19
		Ambient Light Sensor	CM36558	400 Kbps		0x51	Write:0xA2 / Read:0xA3
	Sensor Hub	Proximity Sensor					
		Pressure Sensor	BMP280	400 Kbps		0x77	Write:0xEE / Read:0xEF
I2C-2 (I3C)	AP	Rear Camera	IMX230	400 Kbps		0x1A	Write:0x34 / Read:0x35
			EEPROM	400 Kbps		0x50	Write:0xA0 / Read:0xA1
			AF driver	400 Kbps		0x0C	Write:0x18 / Read:0x19
I2C-3	AP	Audio Smart PA	RT5510	400 Kbps		0x34	Write:0x68 / Read:0x69
		NFC	ST21NFCD	400 Kbps		0x08	Write:0x10 / Read:0x11
I2C-4 (I3C)	AP	Front Camera	S5K2T7	400 Kbps		0x2D	Write:0x5A / Read:0x5B
			EEPROM	400 Kbps		0x52	Write:0xA4 / Read:0xA5
			AF driver=NA				
I2C-5	AP	Sub-PMIC	MT6371 PMU	3.4 Mbps		0x34	Write:0x68 / Read:0x69
			MT6371 PD	3.4 Mbps		0x4E	Write:0x9C / Read:0x9D
I2C-6	AP						

Note : I2C Spec. : Standard mode (100 kbps) and Fast mode (400 kbps), Fast mode Plus (1 Mbps) and High-speed mode (3.4 Mbps)

华勤通讯 Huaqin Telecom Technology Com.,Ltd

Title	02_I2C_ID_Overview	
Size C	Project F9_MB_V1	Rev V1
Date: Friday, October 19, 2018	Sheet 2 of 99	

Date	Category	Item
2017.11.24 (V0.1)	Page 05	V0.1 Release
2017.12.7 (V0.2)	Page 11	Change power of AVDD18_DDR(H21) from VIO18_PMU to EMI_VDD1, connecting EMI_VDD1 to SH2102 in star connection
	Page 12	Add Note 12-5
	Page 21	Add SH2102 for star connection among EMI_VDD1, AVDD18_SOC, and VIO18_PMU
	Page 22	1. Change C2304 from C / 1 / uF / 10V to C / 1 / uF / 6.3V 2. Change R2301 from R / 1.5 / K to R / 7.5 / K 3. Update Note 22-5
	Page 44	1. To enhance LPDDR3 power off sequence,change C4422 from 0.1uF to 2.2uF, and change C4423 from 0.1uF to 1uF 2. Change VDD1 power of eMCP from VIO18_PMU to EMI_VDD1, fulfilling power rail in star connection
	Page 51	1. Add 2nd source plan for U5004 2. Add Note 51-3 and Note 51-4

华勤通讯 Huaqin Telecom Technology Com.,Ltd		
Title 05_Change_Notice		
Size C	Project F9_MB_V1	Rev V1
Date: Friday, October 19, 2018	Sheet 5 of 99	

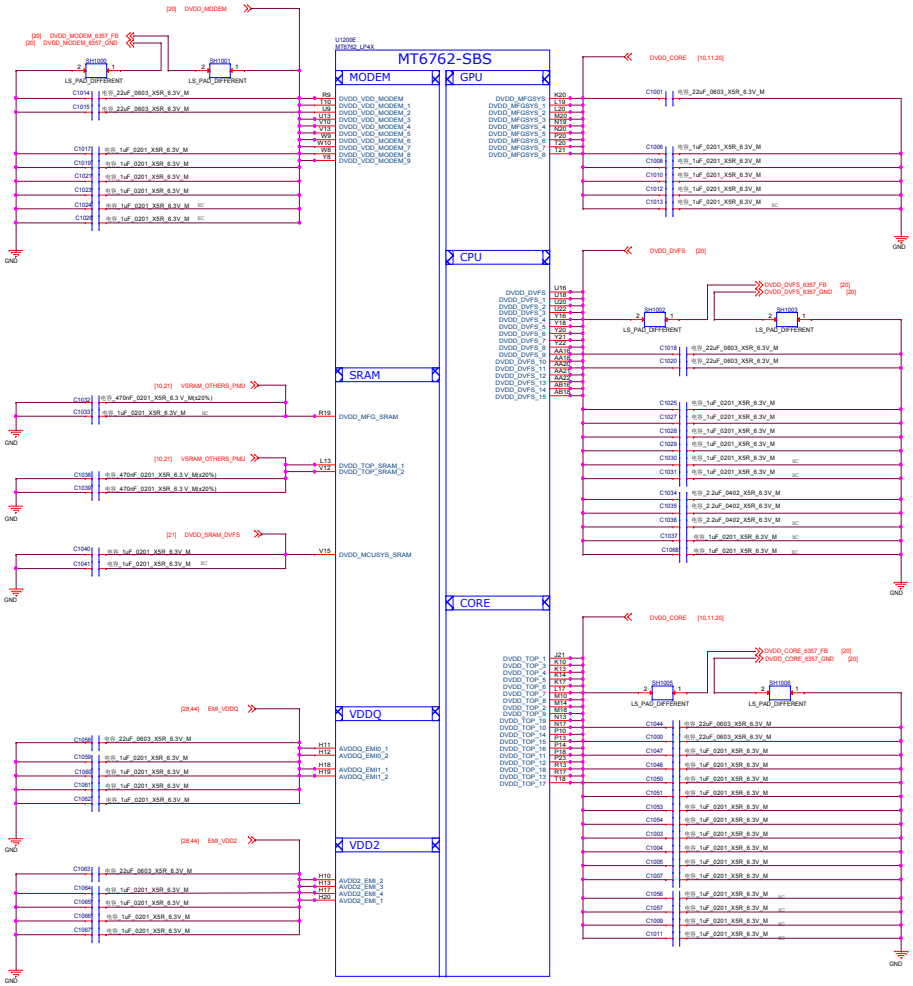

华勤通讯 Huaqin Telecom Technology Com.,Ltd		
Title 10_BB_POWER_PDN		
Size D	Project F9_MB_V1	Rev V1
Date: Friday, October 19, 2018	Sheet 10 of 99	

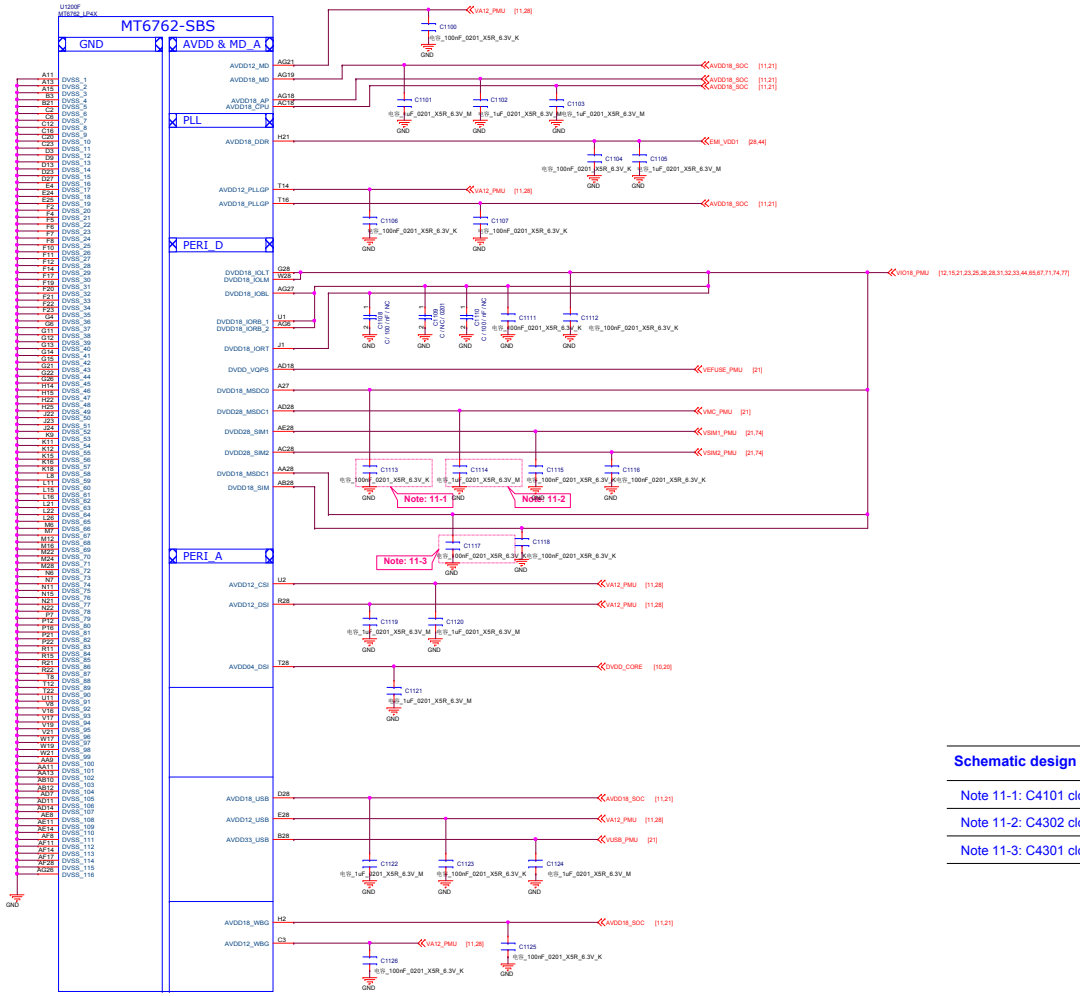

Schematic design notice of "11_BB_POWER_IO" page.

Note 11-1: C4101 closed DVDD18_MSDC0 150mil

Note 11-2: C4302 closed DVDD28_MSDC1 150mil

Note 11-3: C4301 closed DVDD18_MSDC1 150mil

华勤通讯 Huaqin Telecom Technology Com.,Ltd			
Title	11_BB_POWER_IO		
Size D	Project F9_MB_V1		Rev V1
Date: Friday, October 19, 2018		Sheet 11 of 99	

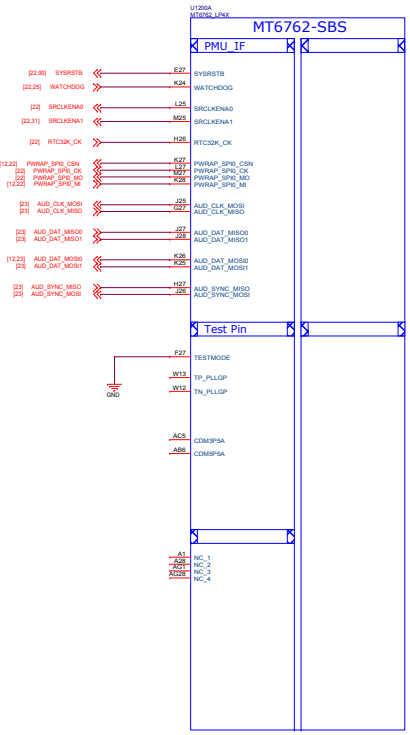

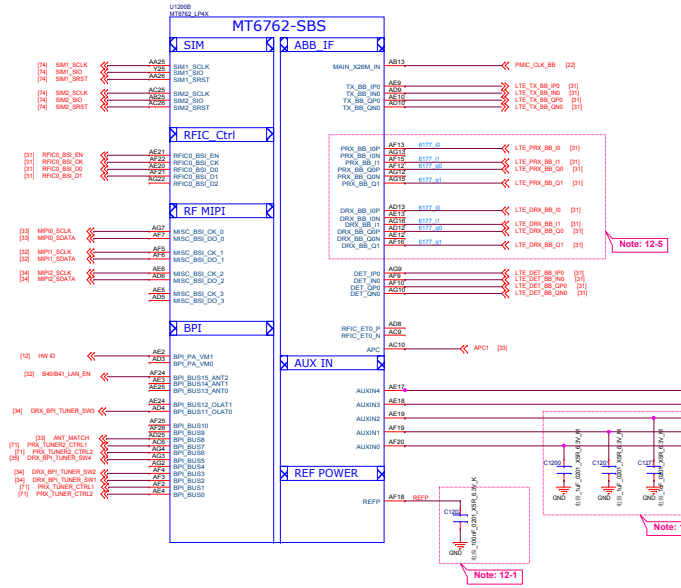

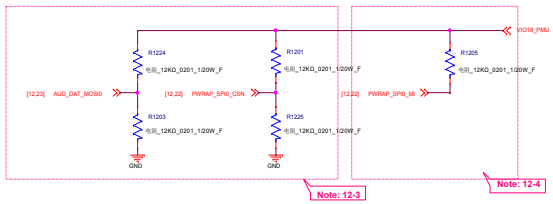

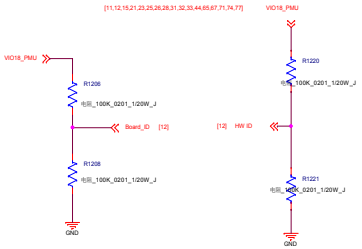

Schematic design notice of "12_BB_1" page.

Note 12-1: The de-coupling cap. for REFP (AF18 ball) have to be placed as close to BB as possible.

Note 12-2: To shunt a 1uF capacitor in the AUXIN ADC input to prevent noise coupling. It should be placed as close to BB as possible. Connect the unused AUX ADC input to GND.

Note 12-3: "PWRAP_SPI0_CSN" and "AUD_DAT_MOSI0" are bootstrap pin to select which interface will be the JTAG pin out.

PWRAP_SPI0_CSN	AUD_DAT_MOSI0	JTAG Function	
default=PU	default=PD	AP_JTAG	MD_JTAG
HI	LO	N/A	N/A
HI	HI (by ext. PU)	SPI0+EINT8	SPI1+SPI3
LO (by ext. PD)	LO	SPI0+EINT8	N/A
LO (by ext. PD)	HI (by ext. PU)	MSDC1	N/A

Note 12-4: PWRAP_SPI0_MO and PWRAP_SPI0_MI are DDR type feature in bootstrap

PWRAP_SPI0_MI	Booting interface	
default=PU	DDR	MSDC0 pin mux
LO (by ext. PD)	LPDDR3	follow LP3 Ref SCH.
HI	LPDDR4X	follow LP4X Ref SCH.

Note 12-5: Please set unused IQ pins in NC

华勤通讯 Huaqin Telecom Technology Com.,Ltd

Title	12_BB_1	
Size D	Project F9_MB_V1	Rev V1
Date: Friday, October 19, 2018	Sheet 12 of 99	

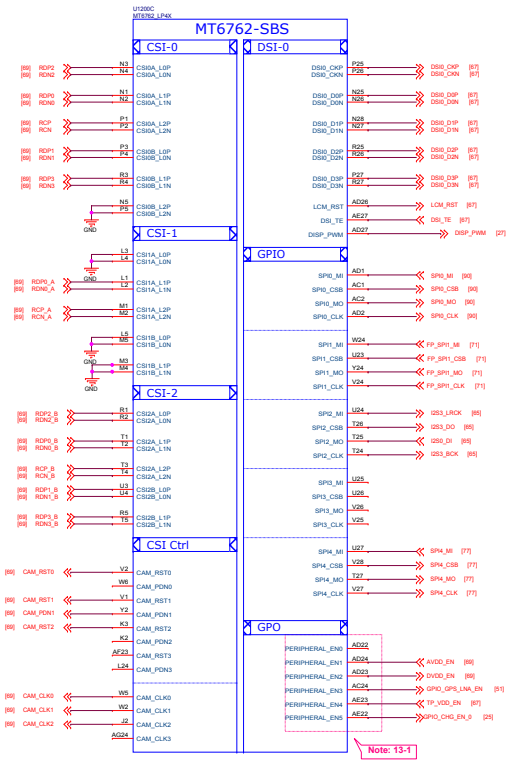

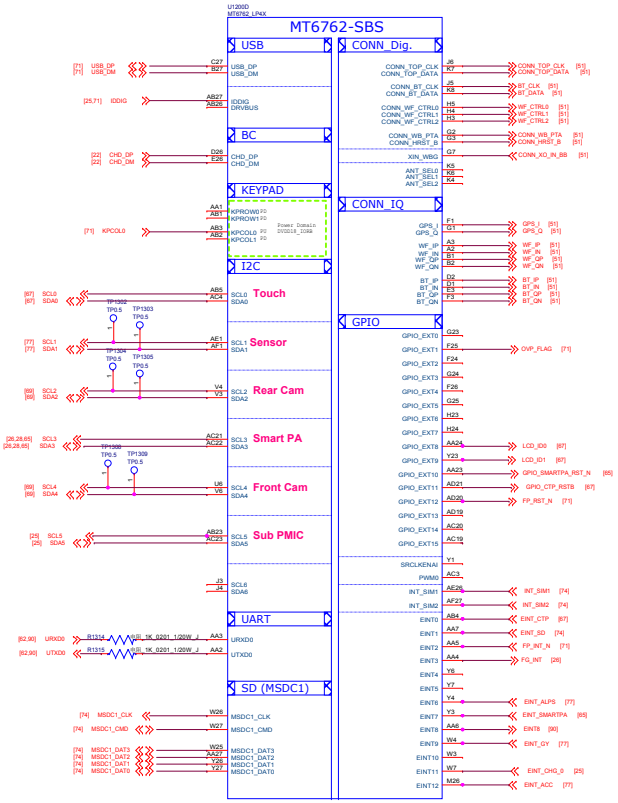

Schematic design notice of "13_BB_2" page.

Note 13-1: The enable pin of acoustic or optoelectronic devices (e.g. SPK AMP/Backlight/Charger OCP/OVP) suggest to use Peripheral_EN[0:5]
If use other GPIOs as enable pin, suggest to reserve 0201 NC to GND

华勤通讯 Huaqin Telecom Technology Com.,Ltd			
Title	13_BB_2		
Size D	Project F9_MB_V1		Rev V1
Date: Friday, October 19, 2018		Sheet 13 of 99	

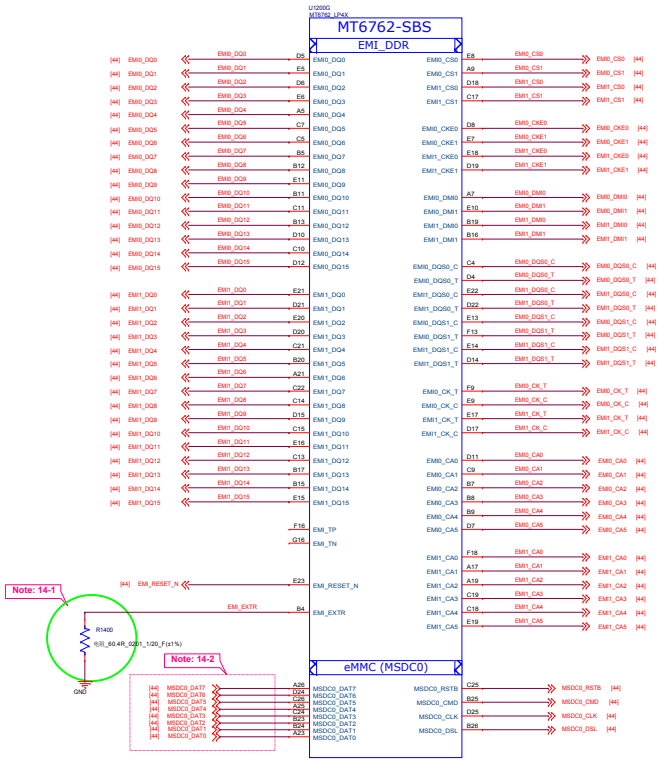

Schematic design notice of "14_BB_3" page.

Note 14-1: R4001 please select 60.4 ohm (1%) resistor

Note 14-2: Please check eMCP LP3 and eMCP LP4X pin mux

华勤通讯 Huaqin Telecom Technology Com.,Ltd			
Title	14_BB_3		
Size D	Project F9_MB_V1		Rev V1
Date: Friday, October 19, 2018		Sheet 14 of 99	

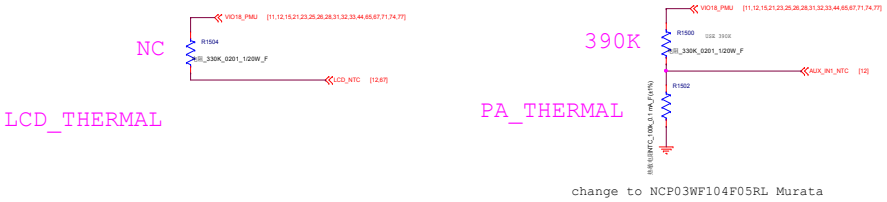

Thermistor to sense RF PA temperature

1. NTC1502 must close to LTE Band 7 PA or the hottest PA <2mm.
2. The distance is the shortest distance from package edge to edge.

Thermistor / To sense board level temperature

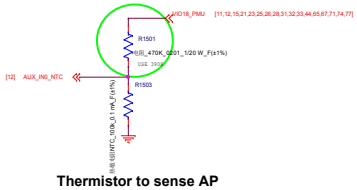

Thermistor to sense AP temperature

1. NTC1501must keep a distance about 6-8 mm away from AP and far from other heat sources 10 mm at least.
2. The distance is the shortest distance from package edge to edge.

华勤通讯 Huaqin Telecom Technology Com.,Ltd			
Title	15_BB_AUXADC_Thermal		
Size D	Project F9_MB_V1		Rev V1
Date: Friday, October 19, 2018		Sheet 15 of 99	

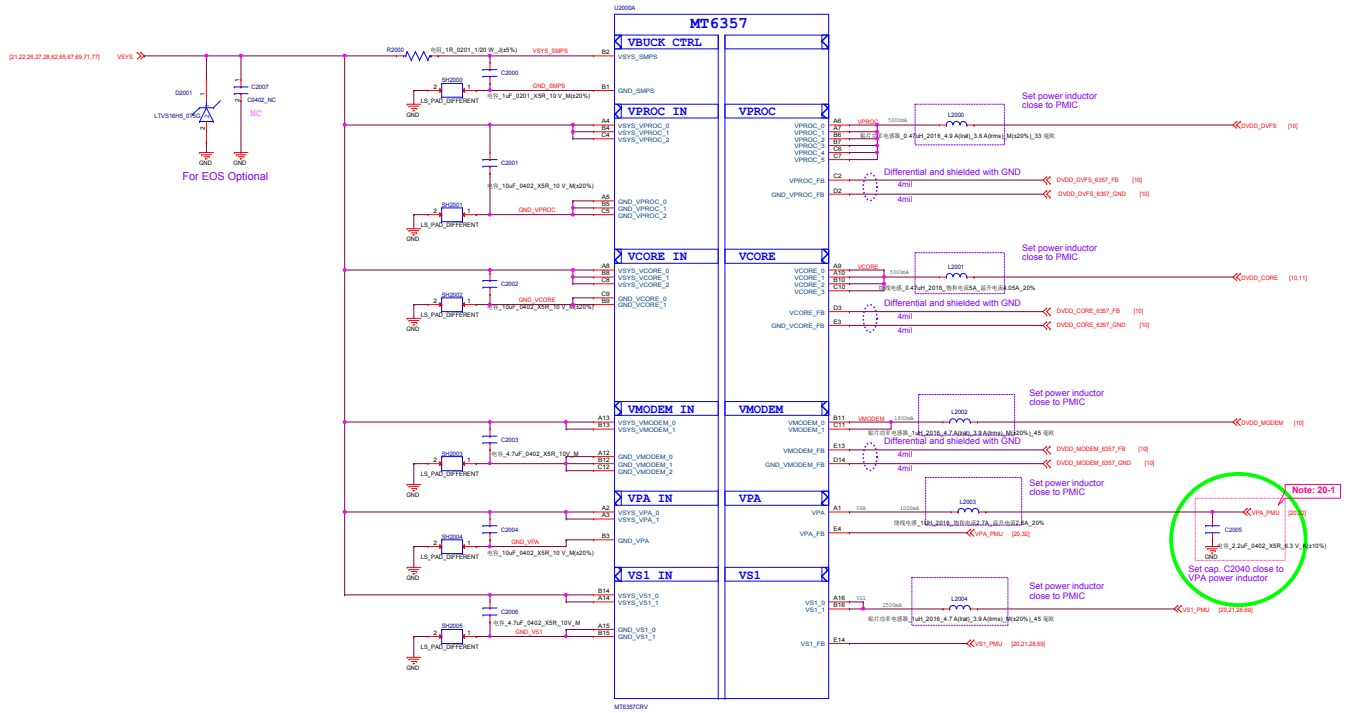

Schematic design notice of "20_POWER_MT6357_Buck"

Note 20-1: C2040, please choose 0402 size

Note 20-2: PMIC Part number notice for MT6765/62/61 platform

MTK Platform	PMIC
MT6765 / 62	MT6357CRV
MT6761	MT6357MRV

华勤通讯 Huaqin Telecom Technology Com.,Ltd		
Title	20_POWER_MT6357_Buck	
Size D	Project F9_MB_V1	Rev V1
Date: Friday, October 19, 2018	Sheet 20 of 99	

MT6356 LDO output

Input Power	Power Name	Output Voltage (V)	Output Current	Default Voltage
LDO from VBAT	VFE28	2.8	40mA	2.8V
	VXO22	2.24	25mA	2.24V
	VCN28	2.8	40mA	2.8V
	VCAMA	1.8/2.5/2.8	200mA	2.8V
	VAUX18	1.8	20mA	1.8V
	VAUD28	2.8	50mA	2.8V
	VBIF28	2.8	1mA	2.8V
	VCN33	3.3/3.4/3.5/3.6	800mA	3.3V
	VLDO28	2.8/3.0	360mA	2.8V
	VIO28	2.8	200mA	2.8V
	VMC	1.86/2.9/3.0/3.3	200mA	3.0V
	VMCH	2.9/3.0/3.3	800mA	3.0V
	VEMC	2.9/3.0/3.3	800mA	3.3V
	VSIM1	1.7/1.8/1.86/2.76/3.0/3.1	200mA	1.86V
	VSIM2	1.7/1.8/1.86/2.76/3.0/3.1	200mA	1.86V
	VIBR	1.2/1.3/1.5/1.8/2.0/2.8/3.0/3.3	200mA	2.8V
	VUSB	3.07	50mA	3.07V
LDO from VS1	VRF18	1.81	450mA	1.81V
	VMIPI	1.71/1.8/1.84	300mA	3.0V
	VCN18	1.8	200mA	1.8V
	VCAMD	1/1.05/1.1/1.2/1.3/1.5/1.8	600mA	1.2V
	VCAMIO	1.8	300mA	1.8V
	VIO18	1.8	1200mA	1.8V
LDO from VS2	VRF12	1.2	200mA	1.2V
	VA12	1.2	300mA	1.2V
	VSRAM_PROC	0.6~1.31	400mA	1.1V
	VSRAM_OTHERS	0.6~1.31	200mA	0.9V
	VSRAM_GPU	0.6~1.31	400mA	1.0V
	VDRAM	1.12/1.24	1000mA	1.24v

1. "Typical Cap" defined in design notice is the minimum cap. to LDO Cout.
2. NC cap can move to application, if (PCB L<20nH, PCB R<0.2 ohm)
=> value and placement of Cap, please refer design notice

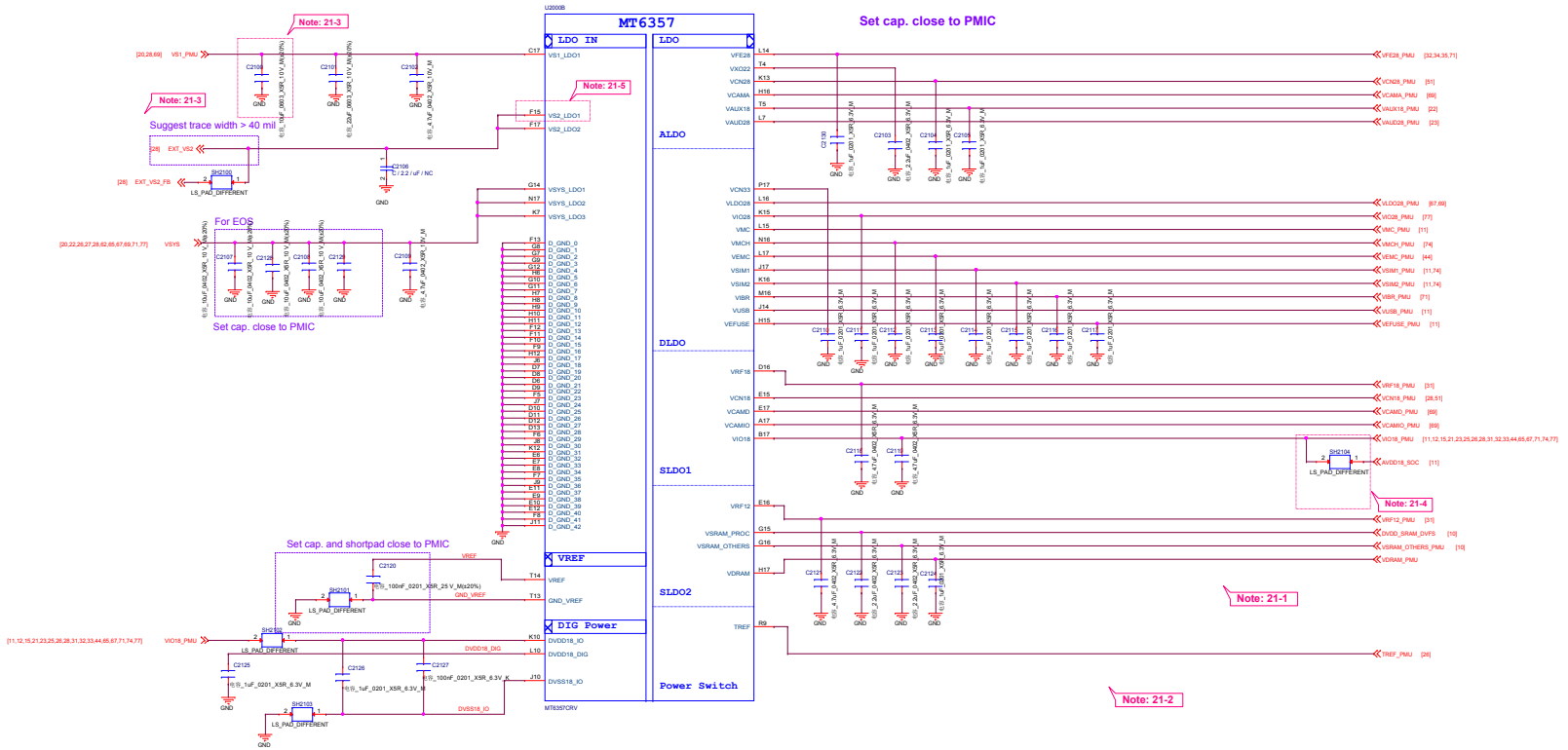

Schematic design notice of "21_POWER_MT6357_LDO"

Note 21-1: If these power trace can meet LDO layout constraint, these CAP can be NC or removed. Please refer to MT6357 design notice.

Note 21-2: Output cap range please follow MT6357CRV LDO design notice

Note 21-3: Ext Buck BOM option

	Ext. buck option	
	w/ EXT VS2 Buck	w/o EXT VS2 Buck
C2104	10uF	22uF
R2851	0-ohm , 0603	NC
R2852	NC	0-ohm , 0603

Note 21-4: Please set SH2101 and SH2102 close to C2141, making star connection among VIO18_PMU, AVDD18_SOC, and EMI_VDD1 near to LDO cap. C2141

Please also refer to MT6357 design notice for further detail design information

Note 21-5: Please connect VS2_LDO1(F15) to VS1_PMU if voltage applied to VCAMD(E17) >= 1.3 V

华勤通讯 Huaqin Telecom Technology Com.,Ltd

Title	21_POWER_MT6357_LDO	
Size D	Project F9_MB_V1	Rev V1
Date: Friday, October 19, 2018	Sheet 21 of 99	

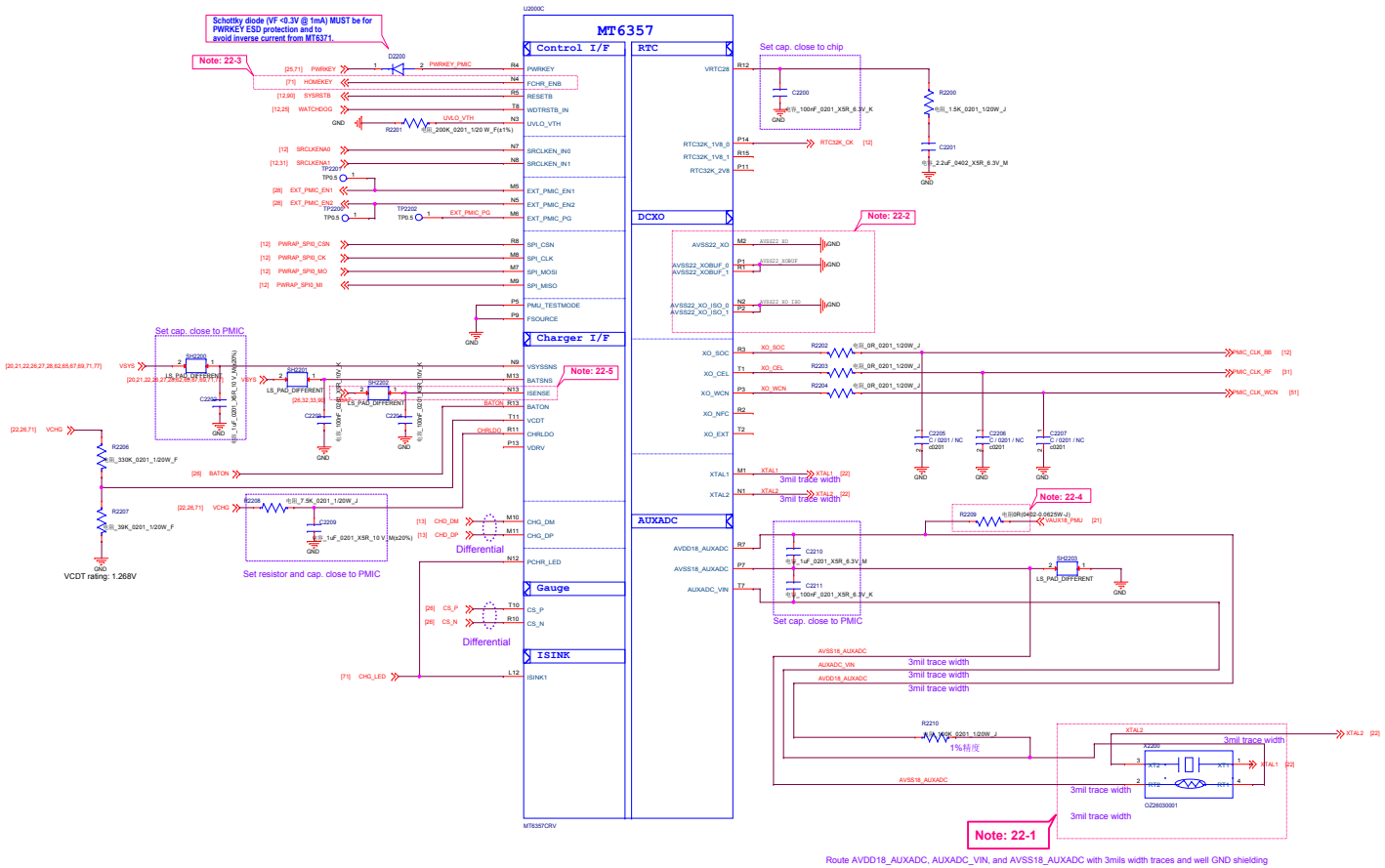

Schematic design notice of "22_POWER_MT6357-IF"	
Note 22-1:	Please implement 2520 & 2016 Size TMS PCB co-layout. Please refer to MT6765_MT6357 Co-Clock Design Notice for co-layout guide
Note 22-2:	1. Please Connect P1 and R1 ball first and then to GND 2. Please Connect P2 and N2 ball first and then to GND 3. Please connect DCXO GND to main GND by independent L1-2 GND via.; DO NOT connect it through L1 GND
Note 22-3:	Let floating if disable HOMEKEY function
Note 22-4:	Please follow MT6765_MT6357 Co-Clock Design Notice for Layout guide of VAUX18, then R8101 can use 0 ohm to replace BEAD.
Note 22-5:	Please connect to battery connector

华勤通讯 Huaqin Telecom Technology Com.,Ltd		
Title	22_POWER_MT6357_IF	
Size D	Project F9_MB_V1	Rev V1
Date: Friday, October 19, 2018	Sheet 22 of 99	

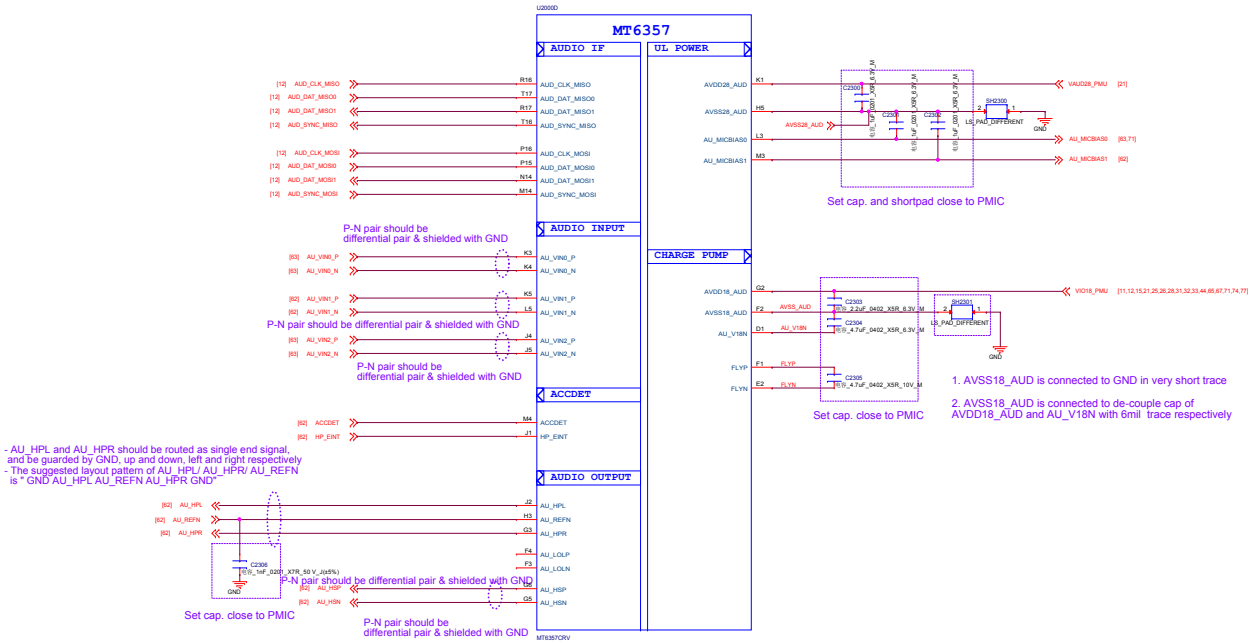

华勤通讯 Huaqin Telecom Technology Com.,Ltd		
Title	23_POWER_MT6357_Audio	
Size D	Project F9_MB_V1	Rev V1
Date: Friday, October 19, 2018	Sheet 23 of 99	

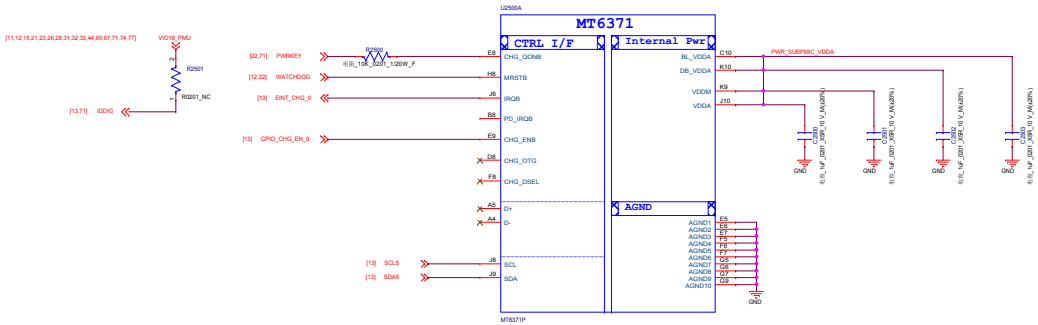

华勤通讯 Huaqin Telecom Technology Com.,Ltd		
Title	25_POWER_SubPMIC-General	
Size D	Project F9_MB_V1	Rev V1
Date: Friday, October 19, 2018	Sheet 25 of 99	

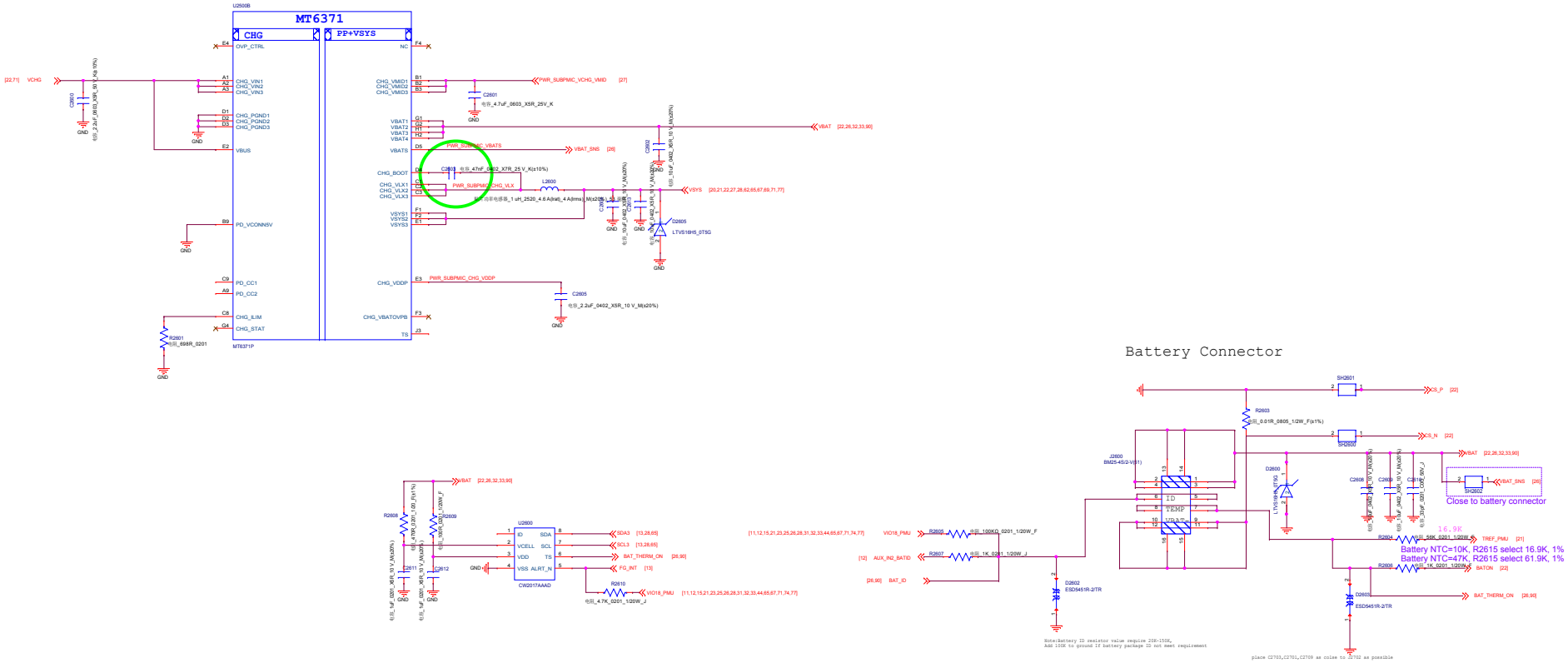

Schematic design notice of "26_POWER_SubPMIC-Charger + PP" page.

Note 26-1: For better ESD or surge performance we need choose suitable device for system protection. Please refer to [Surge device selection guide V2.0] provide by MTK.

华勤通讯 Huaqin Telecom Technology Com.,Ltd		
Title	26_POWER_SubPMIC-Charger+CONN	
Size D	Project F9_MB_V1	Rev V1
Date: Friday, October 19, 2018	Sheet 26 of 99	

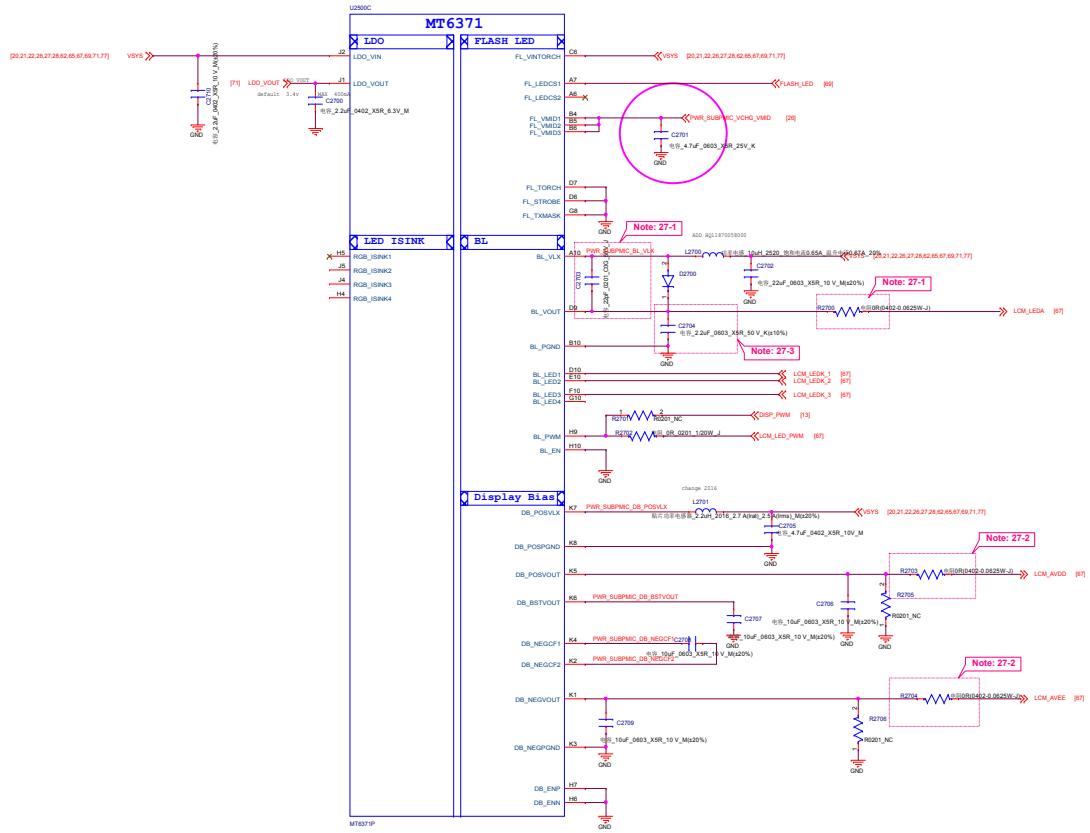

华勤通讯 Huaqin Telecom Technology Com.,Ltd		
Title	27_POWER_SubPMIC-HV powers	
Size D	Project F9_MB_V1	Rev V1
Date: Friday, October 19, 2018	Sheet 27 of 99	

LDO for VA12 Note: 28-1

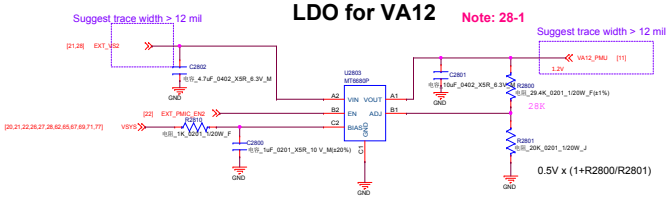

Ext. Bulk for VS2 Note: 28-2

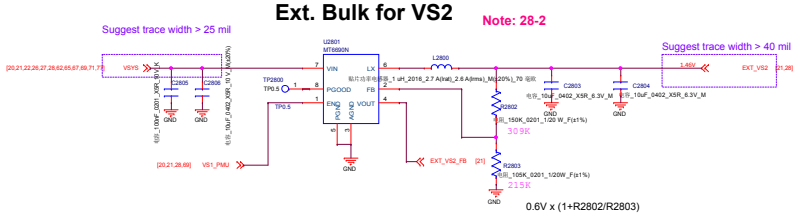

Ext. buck LP4X VDRAM Note: 28-4

MT6691OOP/A / Ext. buck LP4X VDRAM (VDD2)
I2C address: 0X57 (Write:0xAE, Read:0xAF)

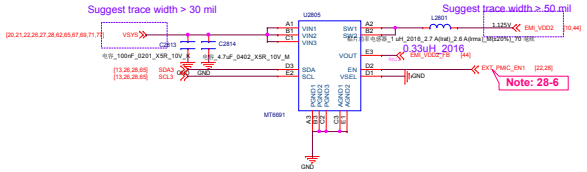

Ext. buck LP4X VDDQ Note: 28-4

MT6691ZXP/A / Ext. buck LP4X VDRAM(VDDQ)
I2C address: 0x50 (Write:0xA0, Read:0xA1)

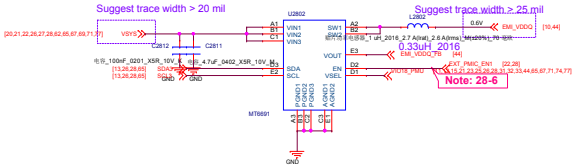

LPDDR4X VDD1 1.8V LDO Note: 28-5

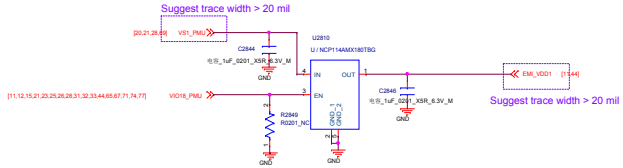

LDO for VCN33 Note: 28-3

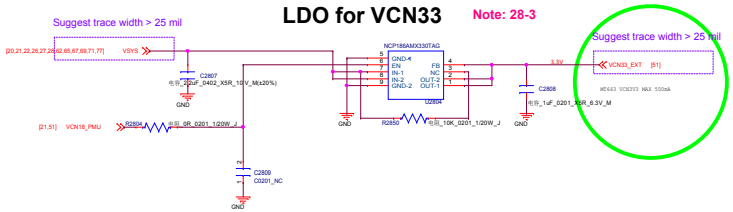

Schematic design notice of "28_POWER_ThirdParty-Power"

Note 28-1:	VA12 Layout placement please close to AP
Note 28-2:	VS2 Buck Layout placement please close to PMIC MT6357
Note 28-3:	VCN33 LDO Layout placement please close to MT6631
Note 28-4:	MT6691ZXP/A and MT6691OOP/A Buck Layout Placement please close to LPDDR4X
Note 28-5:	U2810 LDO Layout Placement Please close to LPDDR4X VDD1 power ball
Note 28-6:	For EMI_VDD2_FB and EMI_VDDQ_FB, please follow MMD rule

华勤通讯 Huaqin Telecom Technology Com.,Ltd			
Title	28_POWER_ThirdParty_Powers		
Size D	Project F9_MB_V1		Rev V1
Date: Friday, October 19, 2018		Sheet 28 of 99	

Transceiver

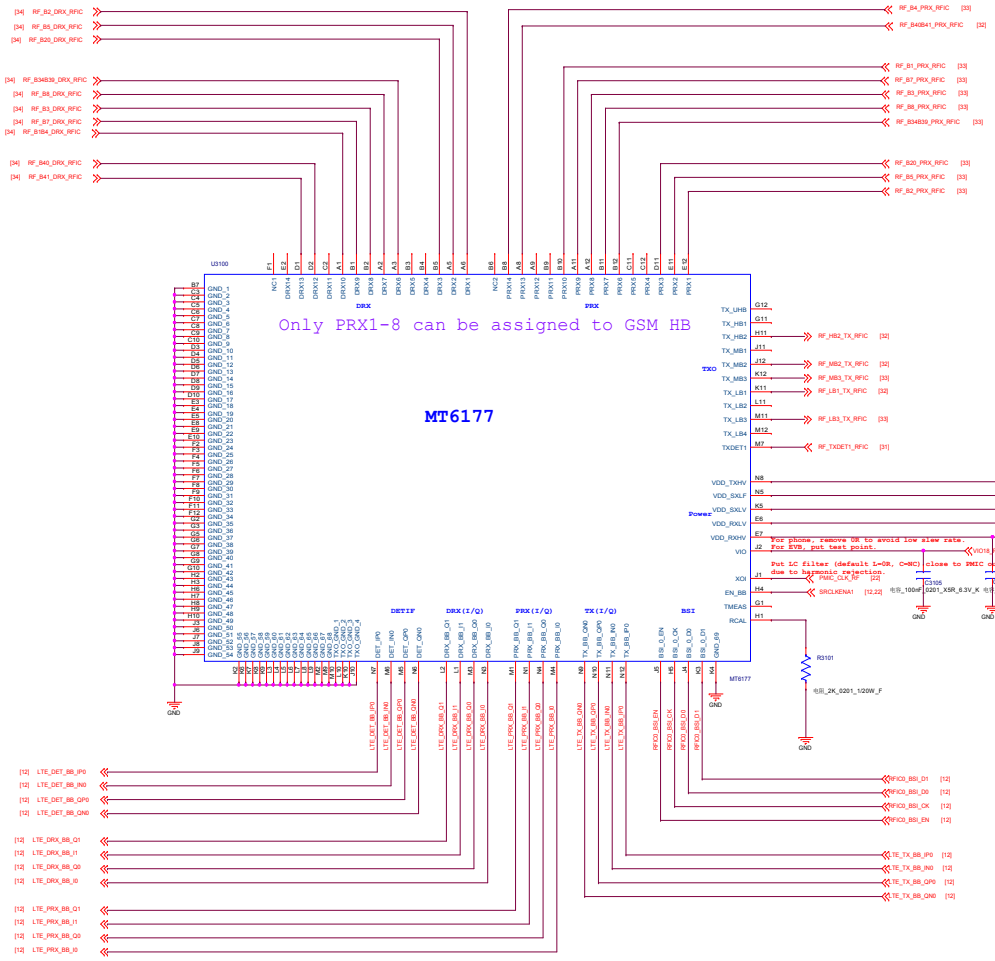

Attenuator for Detector

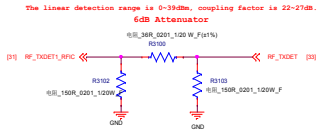

Power For MT6177

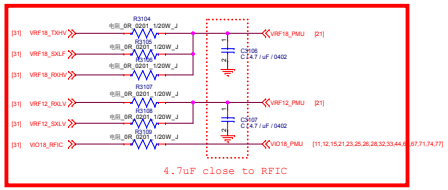

GND

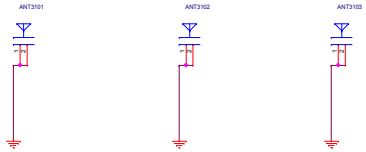

华勤通讯 Huaqin Telecom Technology Com.,Ltd			
Title	31_RF_MT6177_Pin_Out		
Size D	Project F9_MB_V1		Rev V1
Date: Friday, October 19, 2018		Sheet 31 of 99	

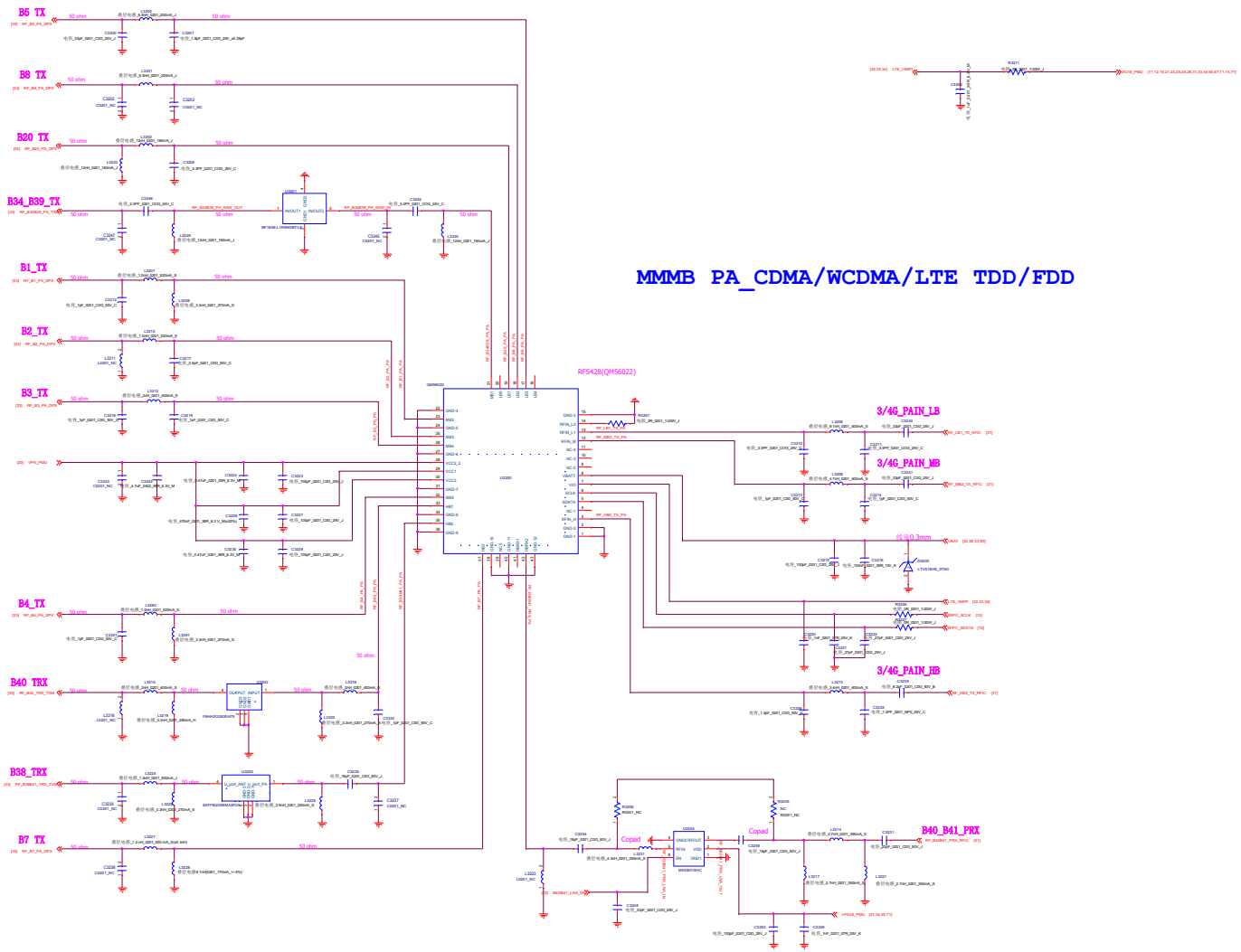

华勤通讯 Huaqin Telecom Technology Com.,Ltd			
Title	32_RF_MT6177_RF_TX		
Size E	Project F9_MB_V1		Rev V1
Date: Friday, October 19, 2018		Sheet 32 of 99	

MAIN_ANT

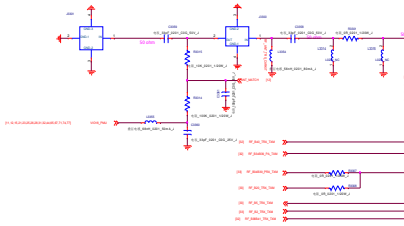

TXM_GSM

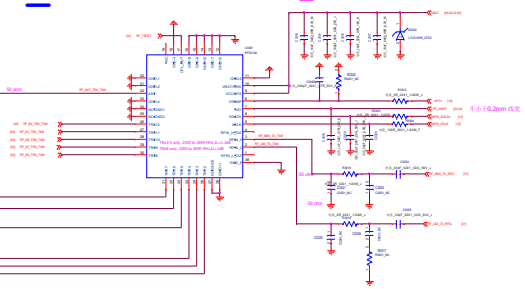

TRX_MB

B1TRX

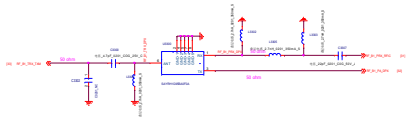

B3 TRX

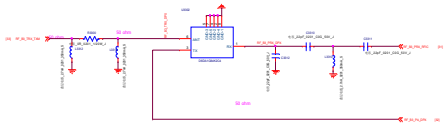

B2 TRX

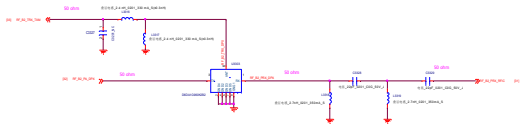

B34 B39 TRX

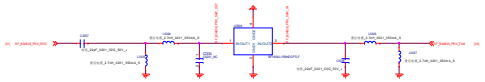

B4 TRX

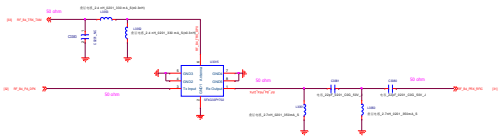

TRX_LB

TRX_LB

B5 TRX

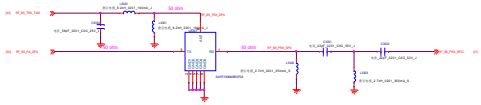

B8 TRX

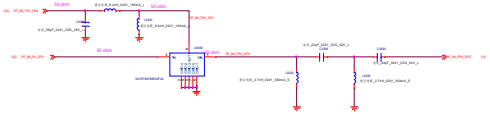

B20 TRX

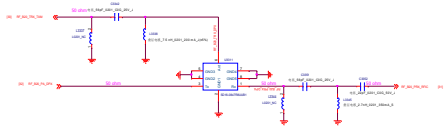

TRX_HB

B7 TRX

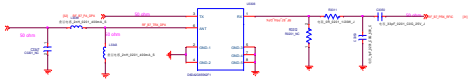

华勤通讯 Huaqin Telecom Technology Com.,Ltd			
Title	33_RF_MT6177_RF_PRX		
Size Custom	Project F9_MB_V1		Rev V1
Date: Friday, October 19, 2018		Sheet 33 of 99	

DIV_ANT

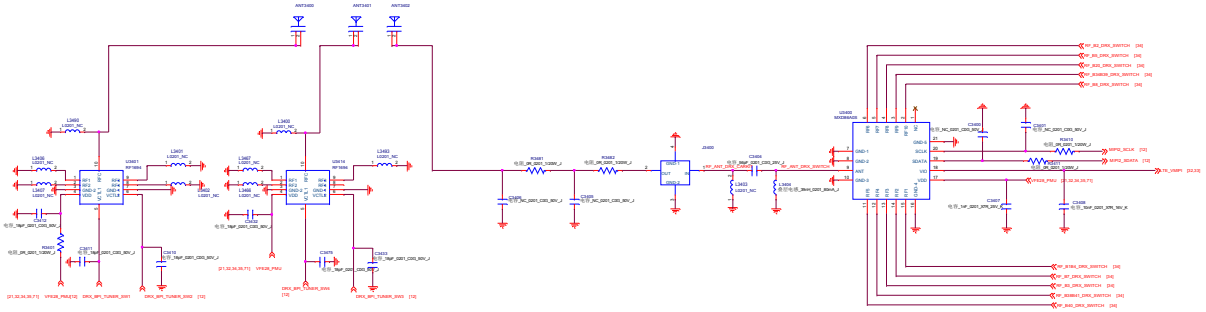

DIV_LB

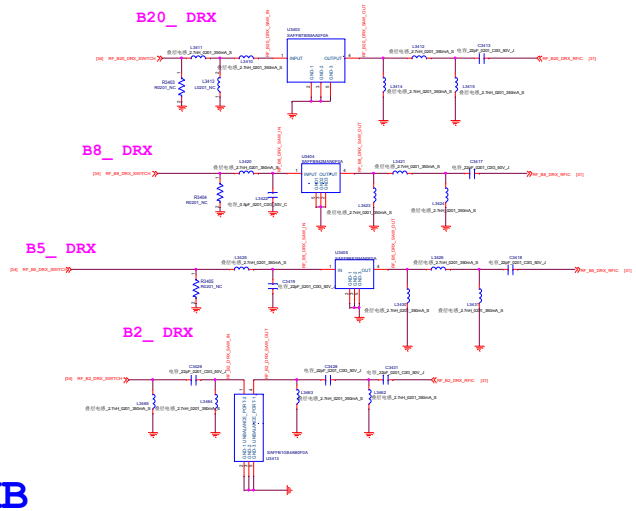

DIV_HB

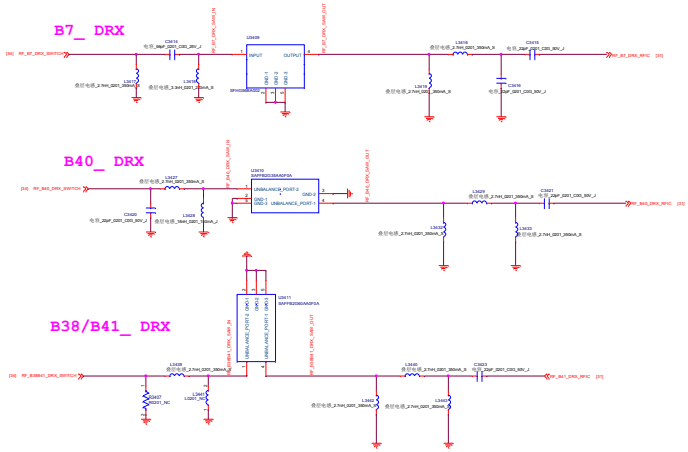

DIV_MB

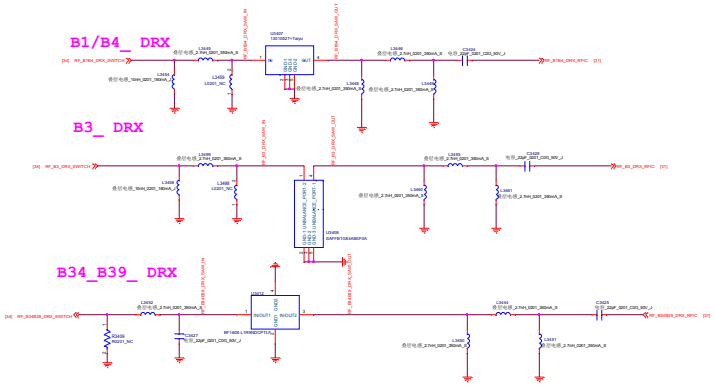

华勤通讯 Huaqin Telecom Technology Com.,Ltd			
Title	34_RF_MT6177_RF_DRX		
Size E	Project F9_MB_V1		Rev V1
Date: Friday, October 19, 2018		Sheet 34 of 99	

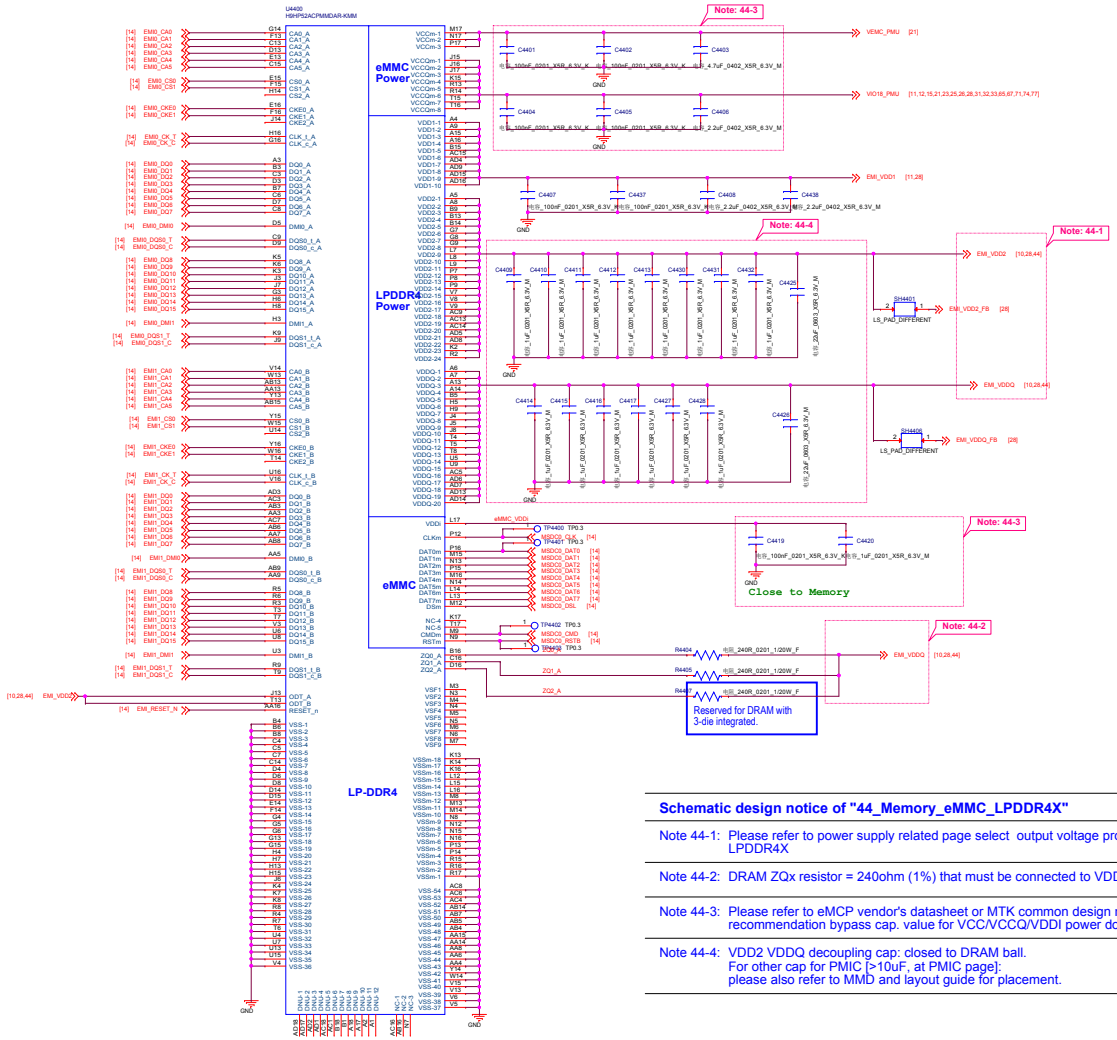

Schematic design notice of "44_Memory_eMMC_LPDDR4X"

Note 44-1: Please refer to power supply related page select output voltage properly for LPDDR4X

Note 44-2: DRAM ZQx resistor = 240ohm (1%) that must be connected to VDDQ,

Note 44-3: Please refer to eMCP vendor's datasheet or MTK common design notice to get the recommendation bypass cap. value for VCC/VCCQ/VDDI power domains of eMMC.

Note 44-4: VDD2 VDDQ decoupling cap: closed to DRAM ball.
For other cap for PMIC [>10uF, at PMIC page]:
please also refer to MMD and layout guide for placement.

华勤通讯 Huaqin Telecom Technology Com.,Ltd		
Title	44_Memory_eMMC_LPDDR4	
Size D	Project F9_MB_V1	Rev V1
Date: Friday, October 19, 2018	Sheet 44 of 99	

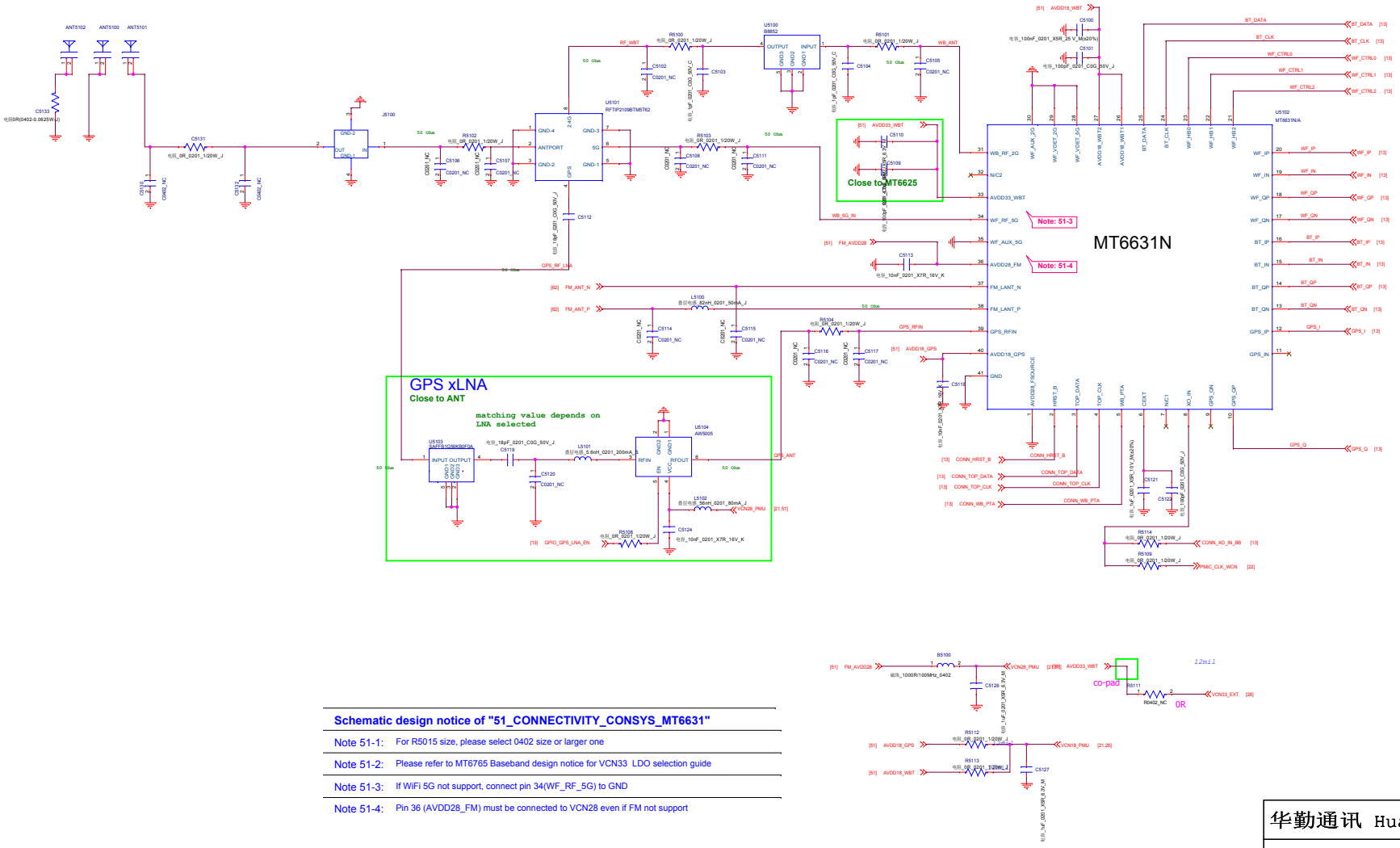

Schematic design notice of "51_CONNECTIVITY_CONSYS_MT6631"	
Note 51-1:	For R5015 size, please select 0402 size or larger one
Note 51-2:	Please refer to MT6765 Baseband design notice for VCN33 LDO selection guide
Note 51-3:	If WiFi 5G not support, connect pin 34(WF_RF_5G) to GND
Note 51-4:	Pin 36 (AVDD28_FM) must be connected to VCN28 even if FM not support

华勤通讯 Huaqin Telecom Technology Com.,Ltd			
Title	51_CONNECTIVITY_CONSYS_MT6631		
Size D	Project F9_MB_V1		Rev V1
Date: Friday, October 19, 2018		Sheet 51 of 99	

AUDIO JACK

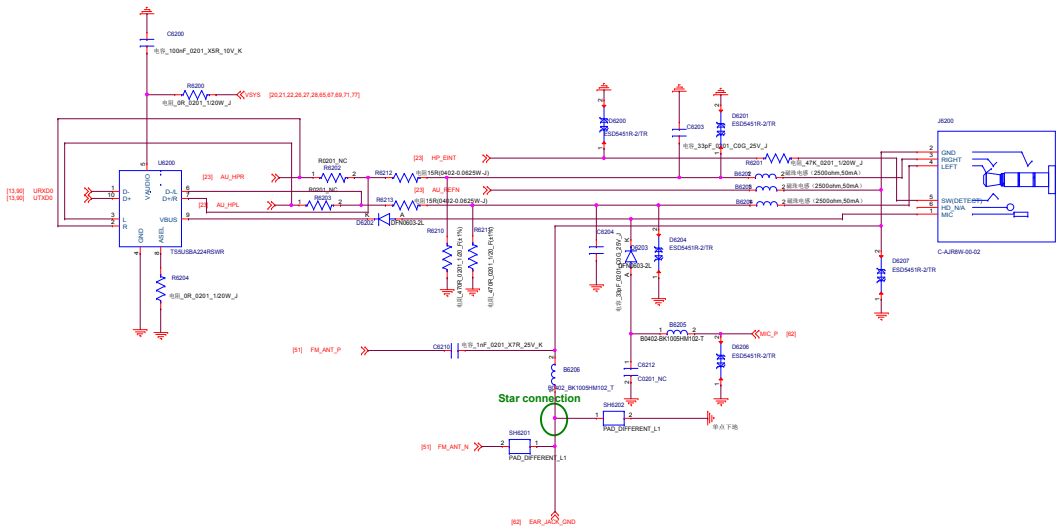

EAR

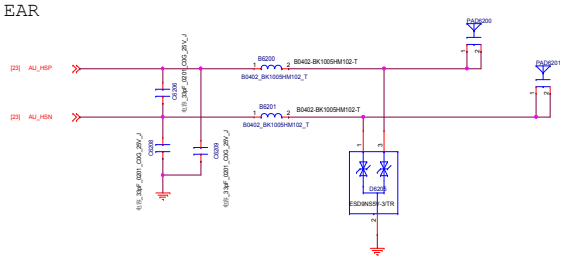

Earphone Microphone

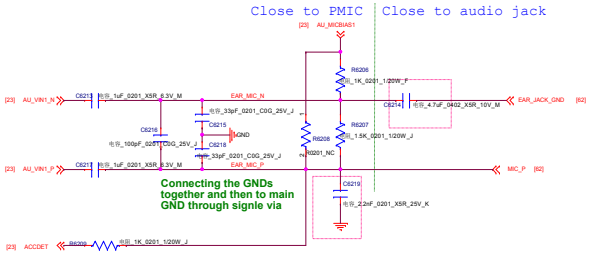

华勤通讯 Huaqin Telecom Technology Com.,Ltd		
Title 62_PERI_AUDIO_IO		
Size D	Project F9_MB_V1	Rev V1
Date: Friday, October 19, 2018	Sheet 62 of 99	

MIC -- Sub

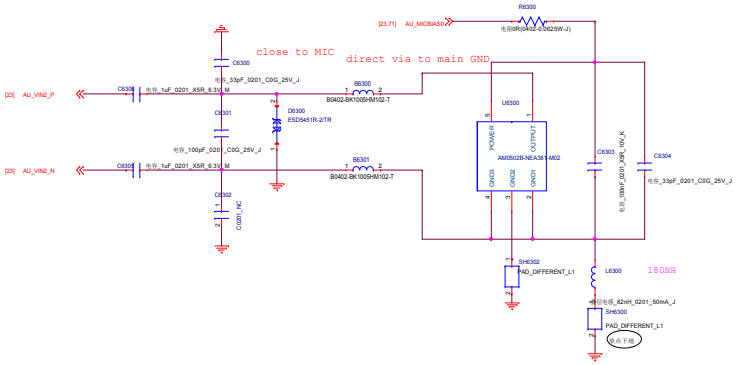

MIC -- Main

华勤通讯 Huaqin Telecom Technology Com.,Ltd		
Title 63_PERI_AUDIO_IO2(2 AMIC)		
Size D	Project F9_MB_V1	Rev V1
Date: Friday, October 19, 2018	Sheet 63 of 99	

AUDIO PA

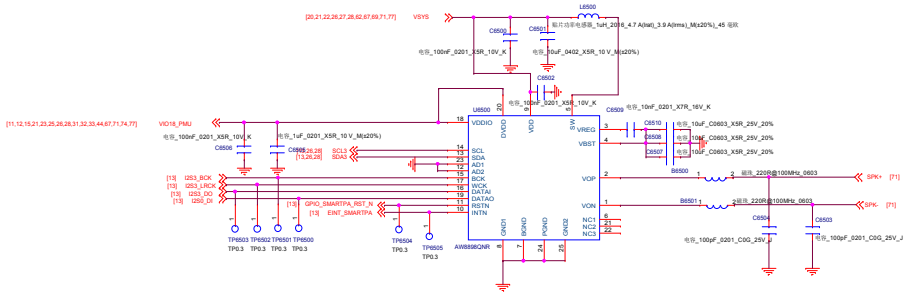

华勤通讯 Huaqin Telecom Technology Com.,Ltd		
Title	65_PERI_SPEAKER_AMP	
Size D	Project F9_MB_V1	Rev V1
Date: Friday, October 19, 2018	Sheet 65 of 99	

Main LCM+CTP

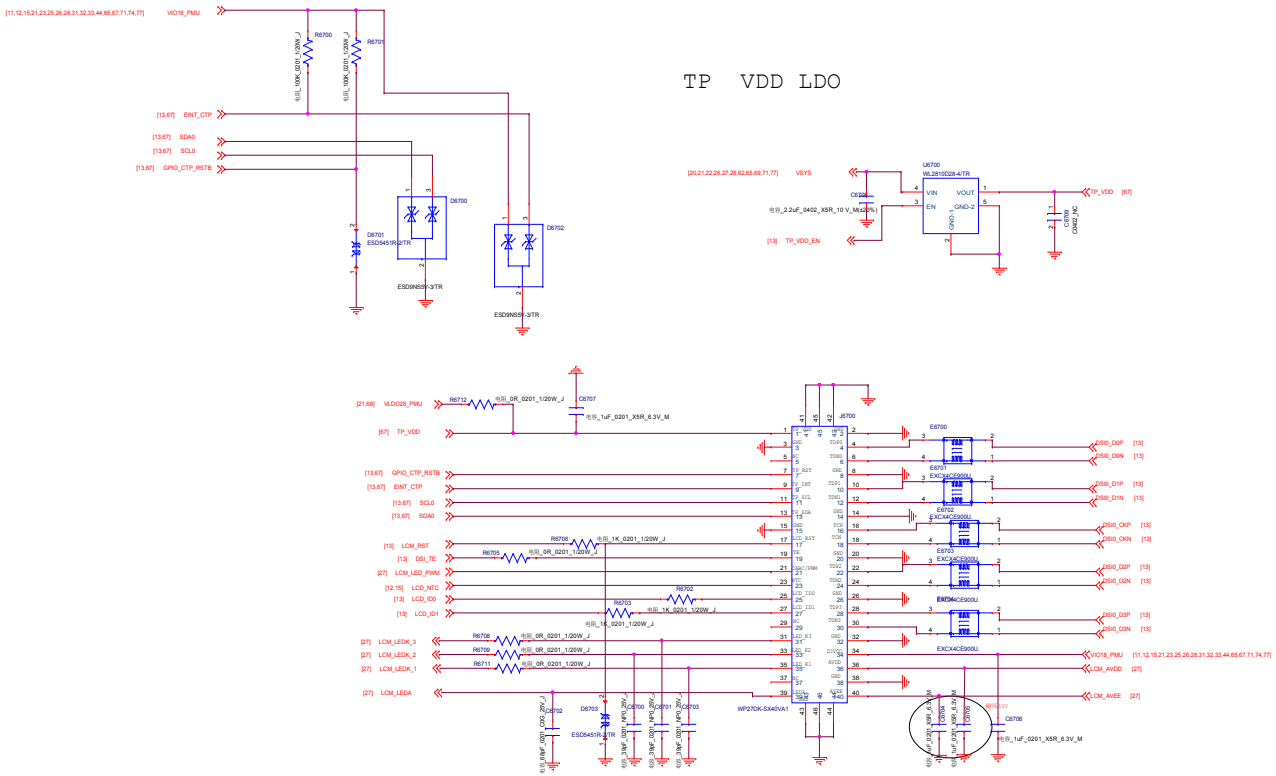

华勤通讯 Huaqin Telecom Technology Com.,Ltd			
Title	67_PERI_LCD_CTP_FP		
Size D	Project F9_MB_V1		Rev V1
Date: Friday, October 19, 2018		Sheet 67 of 99	

Main MONO Camera 12M

厂家	I2C READ	I2C WRITE	ID
舜宇			
欧菲光			

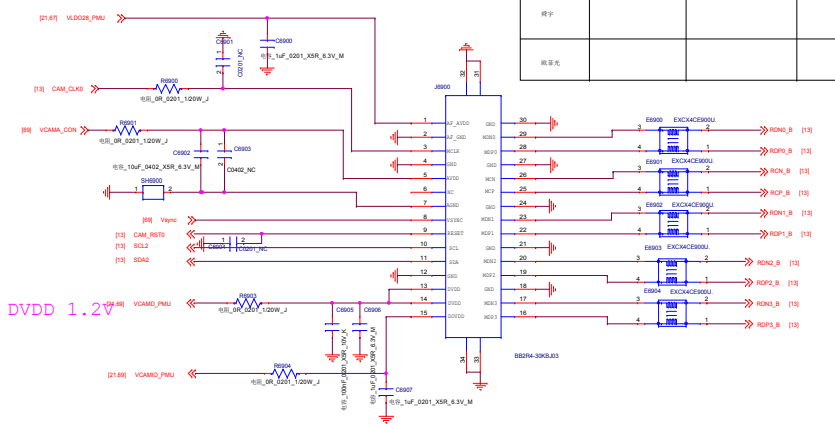

AUX Camera 2M

厂家	I2C READ	I2C WRITE	ID
舜宇			
欧菲光			

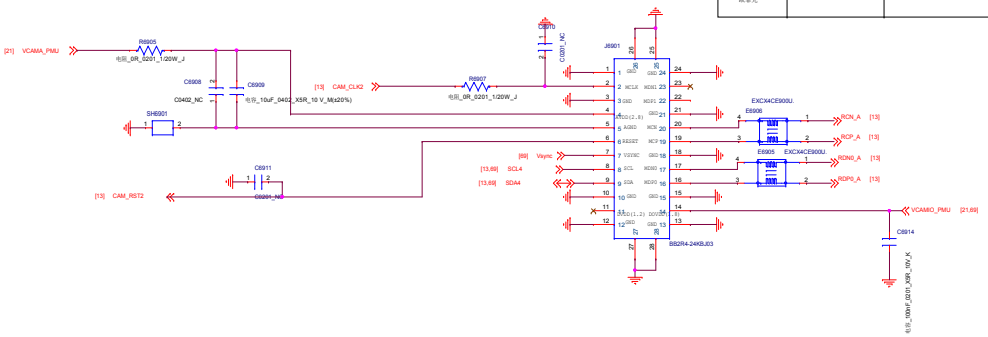

Front Camera - 5M

厂家	I2C READ	I2C WRITE	ID
丘钛微			
欧菲光			

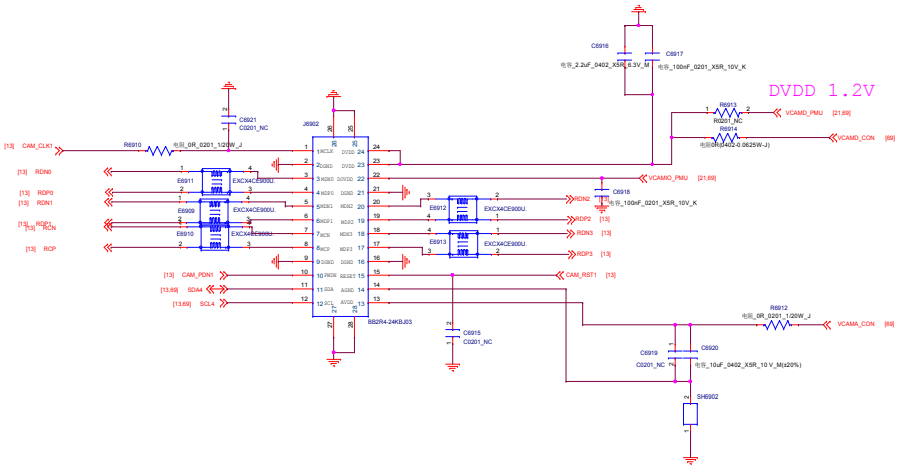

Rear Camera Flash

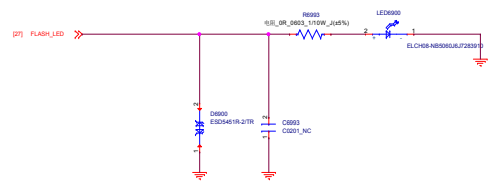

AVDD LDO

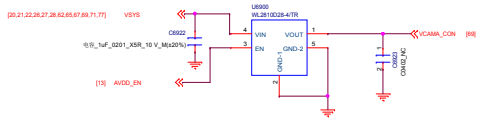

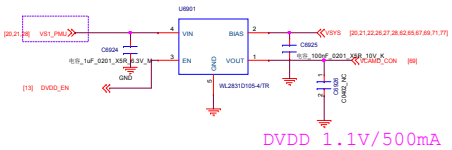

华勤通讯 Huaqin Telecom Technology Com.,Ltd		
Title	69_PERI_CAMERA	
Size D	Project F9_MB_V1	Rev V1
Date: Friday, October 19, 2018	Sheet 69 of 99	

OVP 10.5V

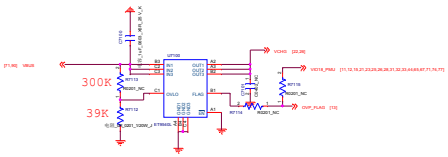

Finger Print

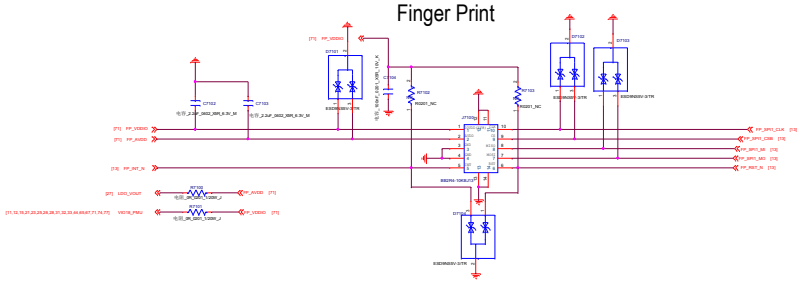

BTB Connector

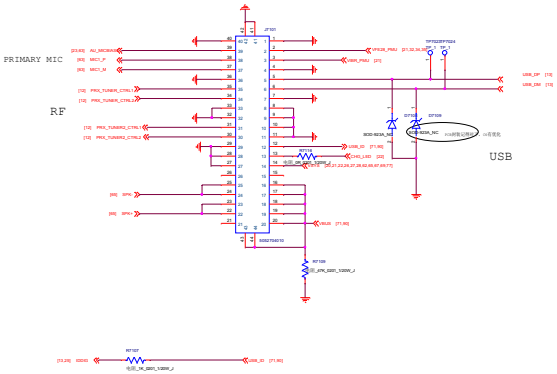

KEY BTB

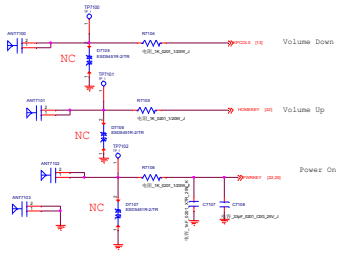

Signal	Description
KPCOL0	Volume Down
HOMEKEY	Volume Up
PWRKEY	PWER ON

华勤通讯 Huaqin Telecom Technology Com.,Ltd		
Title	71_PERI_KEY_BTB_OVP_FP	
Size E	Project F9_MB_V1	Rev V1
Date: Friday, October 19, 2018	Sheet 71 of 99	

SDC2

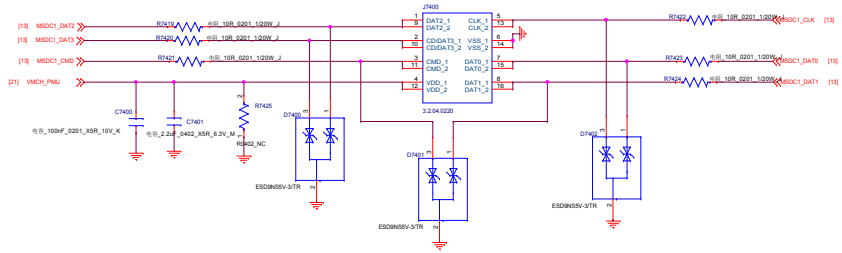

SD_SIM_DET

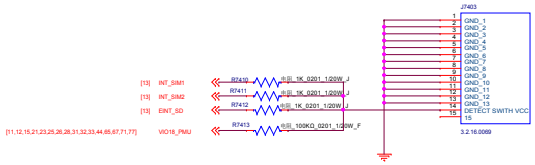

EINT	DEAFAULT	LOW
plug in	int	H
plug OUT	int	L

SIM1

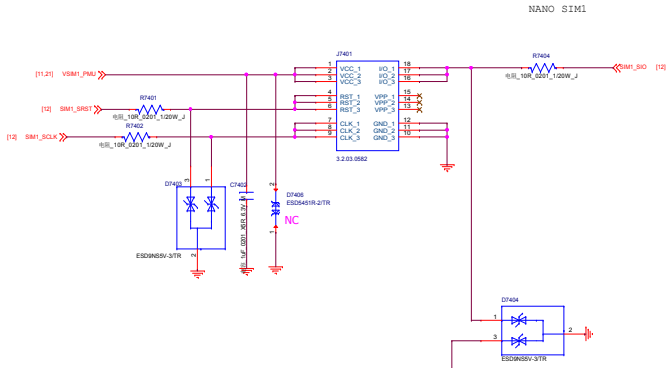

SIM2

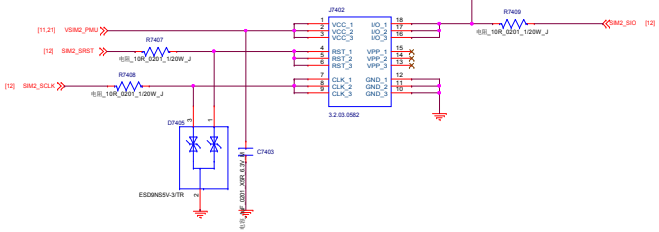

Schematic design notice of "46_MEMORY_SD Card" page.

Note 46-1: For better ESD performance, please select suitable components for system protection.

华勤通讯 Huaqin Telecom Technology Com.,Ltd		
Title	74_PERI_SIM&SD Card	
Size D	Project F9_MB_V1	Rev V1
Date: Friday, October 19, 2018	Sheet 74 of 99	

Gyro+A sensor

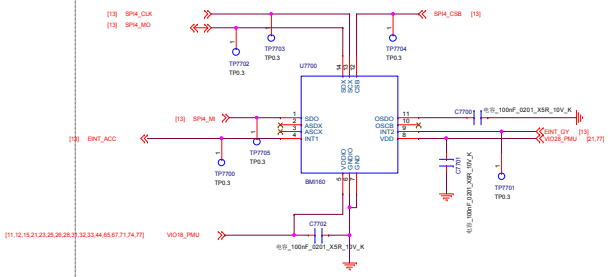

厂家	I2C ADDRESS
BMI120	0x68

E-compass

厂家	I2C ADDRESS
AKM9918C	0ch

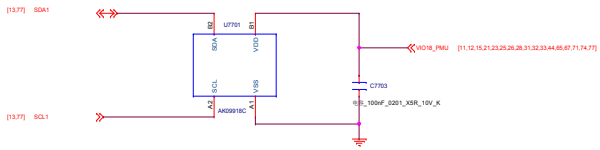

ALS PS

厂家	I2C ADDRESS

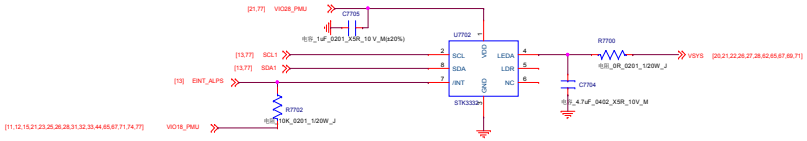

华勤通讯 Huaqin Telecom Technology Com.,Ltd		
Title	77_PERI_SENSORS_MEMs_ALS/PS	
Size D	Project F9_MB_V1	Rev V1
Date: Friday, October 19, 2018	Sheet 77 of 99	

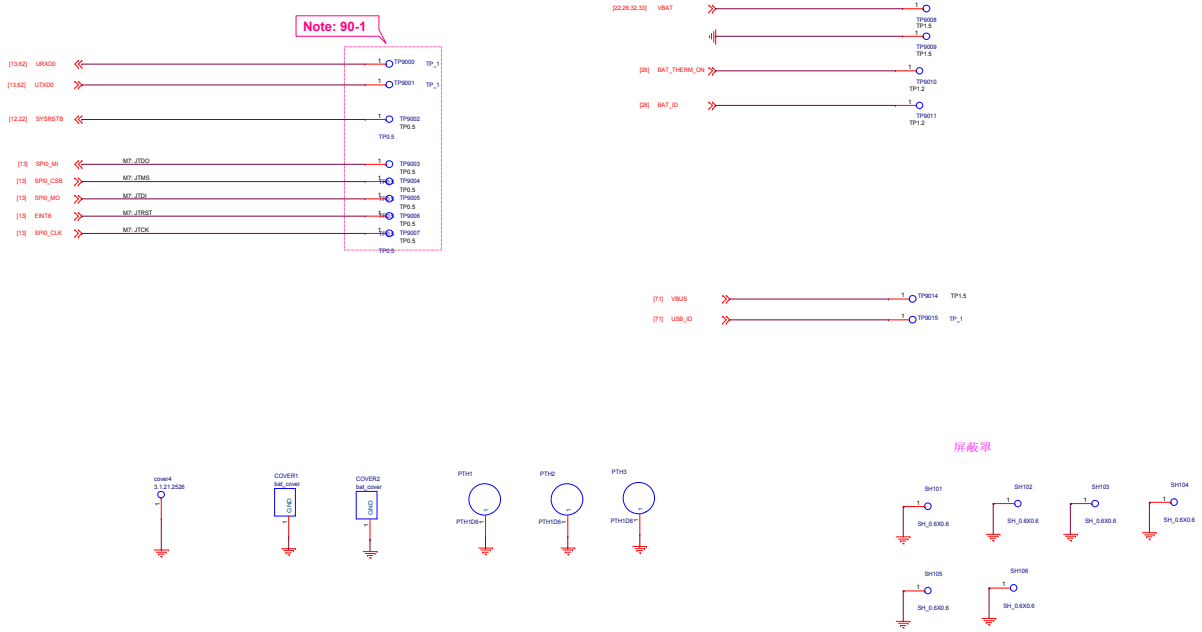

华勤通讯 Huaqin Telecom Technology Com.,Ltd		
Title 90_DEBUG_IO		
Size D	Project F9_MB_V1	Rev V1
Date: Friday, October 19, 2018	Sheet 90 of 99	